LDT-A2

Alexa Large Body (Injection Recording)

Download LDT-A2 manual

Notes:
MDR2 is not supported
-
Use MDR3 for lens encoding

Are Prestons up-to-date?

- Yes → Rigging LDT-A2
- No → Update HU3/HU4/MDR3/MDR4 → Rigging LDT-A2

Rigging LDT-A2

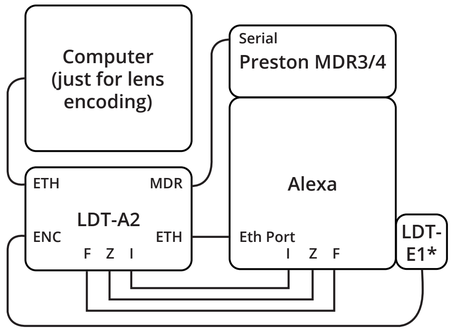

*only required for manual focus/iris/zoom

Setting up the Alexa

WRS Button → Lens Data → Options

- LDS Mount > Off
- Set "Lens Distance Unit"

Set-up Overlay on Camera

Menu > Monitoring → Mon out 1/2/3

- Frame Lines and Status Info → LDS Info > On

On the Preston

Connect the Iris and zoom control handsets to the MDR

↓

Build F-maps before doing lens tables on camera.

↓

Turn off F-Mapping on the HU3/HU4

Note:
When using a Preston always calibrate from the MDR.
See manual if using LDT-E encoders without a Preston.

On the connected Computer

In the web browser go to alexa####.local/ replacing the camera serial number for the hashes → Click "Start New Session"

Building Lens Tables

Connect the Green FIZA cables to the relevant ports on the camera - e.g. A prime should only have focus & iris connected → Calibrate on Preston MDR → Fill in Description, serial and focal length (0 for zooms) → If green cross isn't at the top for inf., iris wide and zoom wide reverse direction on camera → Focus: add each lens engraving and an estimated value for the hard end stop → Iris: add each lens engraving and an estimated value for the hard top and bottom stops → Zoom: add each lens engraving and an estimated value for the hard top and bottom stops → Send table to the camera and save on the camera.

→ Repeat for all lenses → When done: Copy lens tables to all camera SD cards (Large body and Mini) and make a back-up. → Test each LDT/Camera/Preston rig by selecting several lenses and checking the LDT read-out matches the lens engravings.